TV2050GAL-PE-86DIA

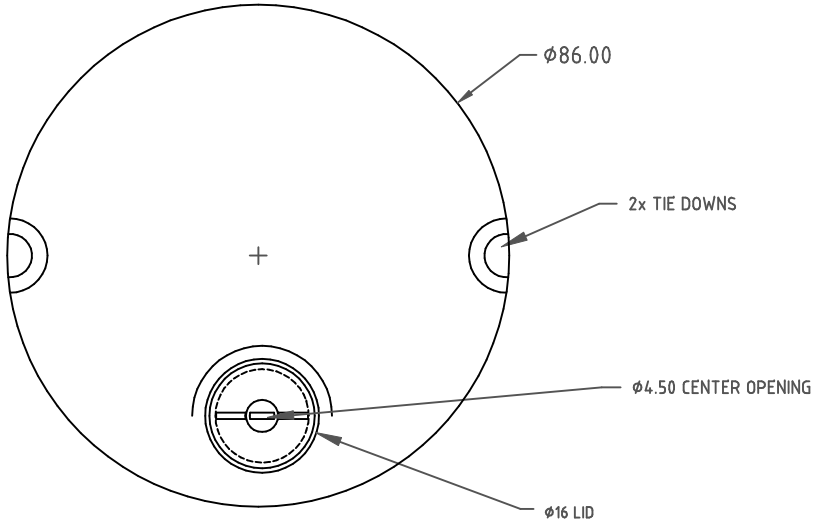

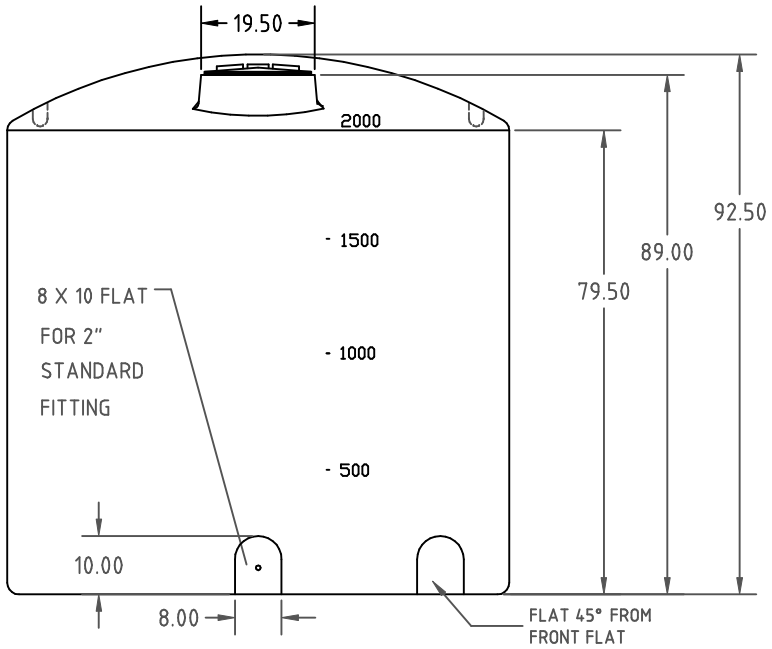

REV	DESCRIPTION	BY / DATE	CCN

ALL DIMENSIONS ARE IN DECIMAL INCHES
TOLERANCES UNLESS OTHERWISE SPECIFIED

POLYETHYLENE	METAL
±1% @ 68° F	DECIMAL ± .125" FRACTION ± 1/4" ANGLE ± 1°

THIRD ANGLE PROJECTION
ANSI 14.5M

DRAWN / DATE: DHJ 10/20/08

APPRD. / DATE: REH 10/31/08

SHOT WEIGHT: 400 LBS.

SHIPPING WEIGHT: 402 LBS.

FINISH:

MATERIAL: 10420

NOTES:
1. .37 WALL AT FITTING

CSI
ChemIndustrial Systems, Inc.
PO Box 500, Cedarburg, WI 53012
262-375-8570 • (Fax) 262-375-8559 • info@chemindustrial.com

DESCRIPTION: 2050 GALLON VERTICAL TANK

SCALE: N.S.

PART NO. TV2050GAL-PE-86DIA