TOP325GAL-PE-RT

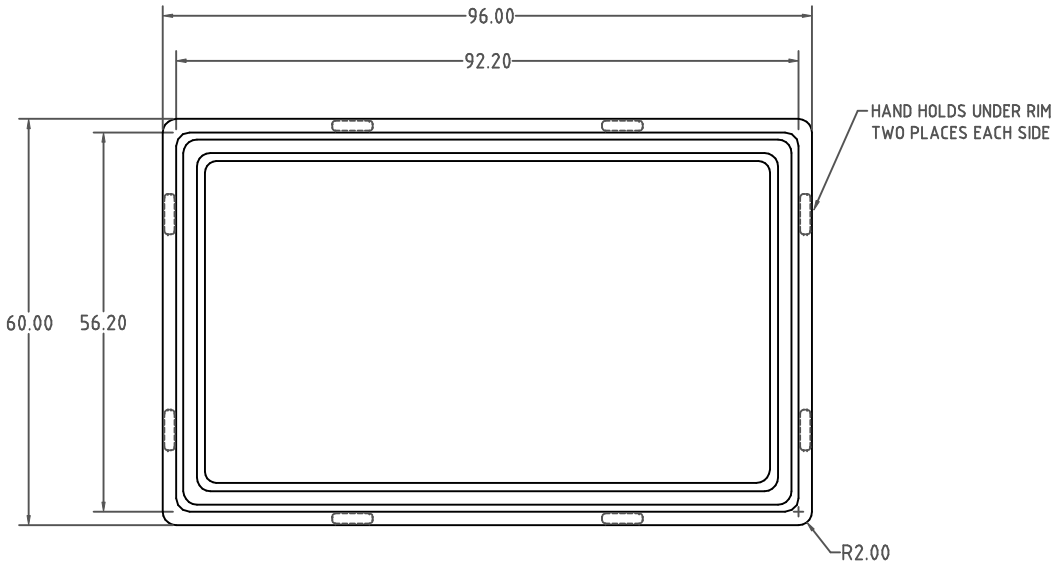

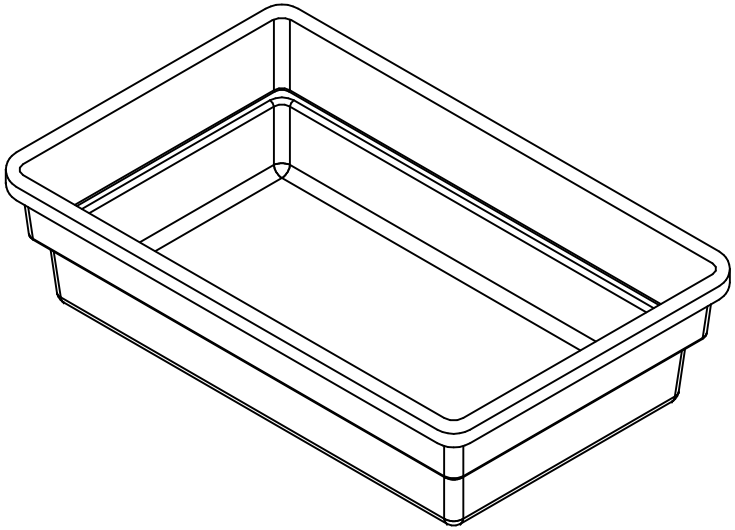

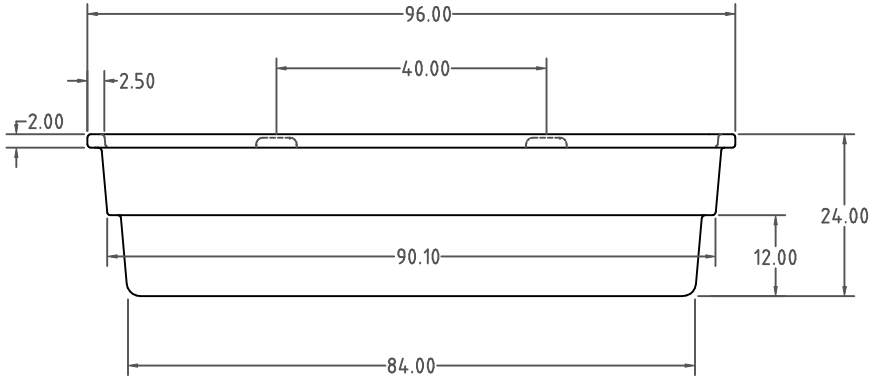

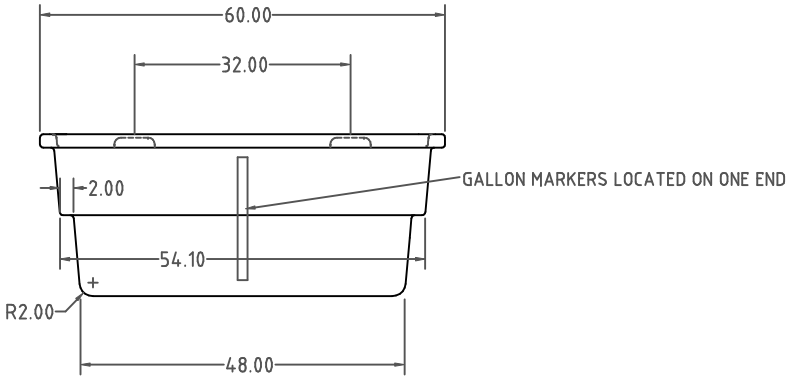

REV	DESCRIPTION	DATE APPRD.	CCN

DRAWN /DATE
DHJ 10/3/07

APPRD. /DATE
REH 11/9/07

MATERIAL
SHOT WEIGHT = 115 LBS. = .25 WALL
10538 2 MELT NATURAL RESIN

ALL DIMENSIONS ARE IN DECIMAL INCHES
TOLERANCES UNLESS OTHERWISE SPECIFIED
± 1 % @ 68°F

THIRD ANGLE PROJECTION
ANSI 14.5M

NOTES:

CSI
ChemIndustrial Systems, Inc.
PO Box 500, Cedarburg, WI 53012
262-375-8570 • (Fax) 262-375-8559 • info@chemindustrial.com

SCALE
NONE

PART NO.
TOP325GAL-PE-RT