TBS1000GAL-101L-1

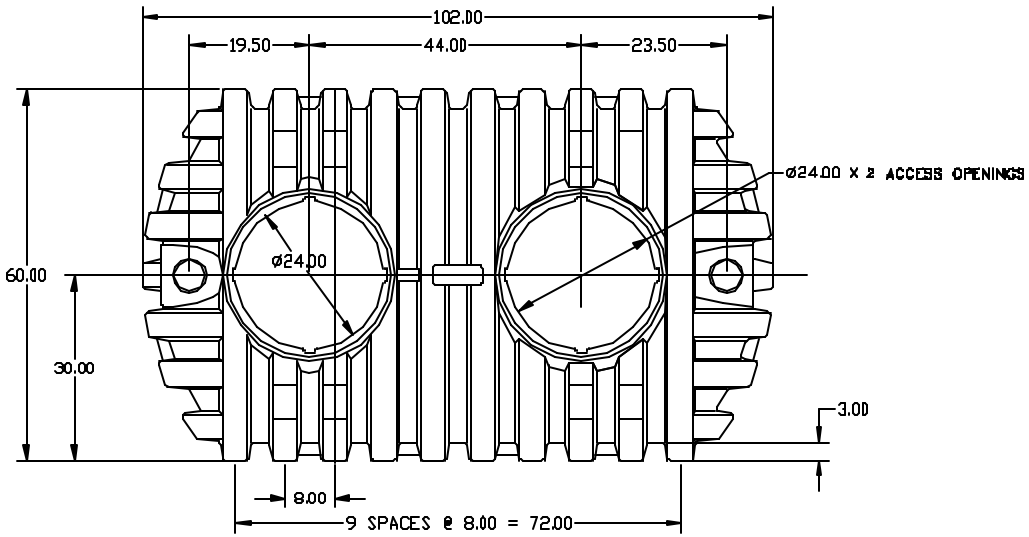

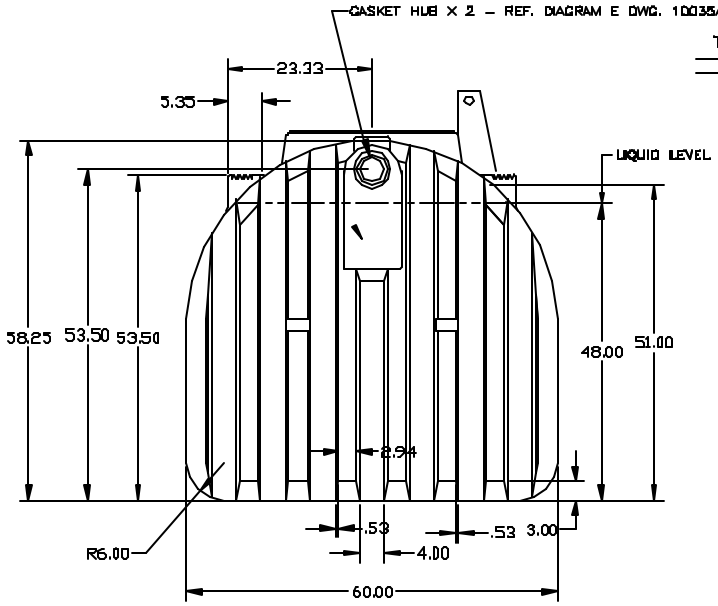

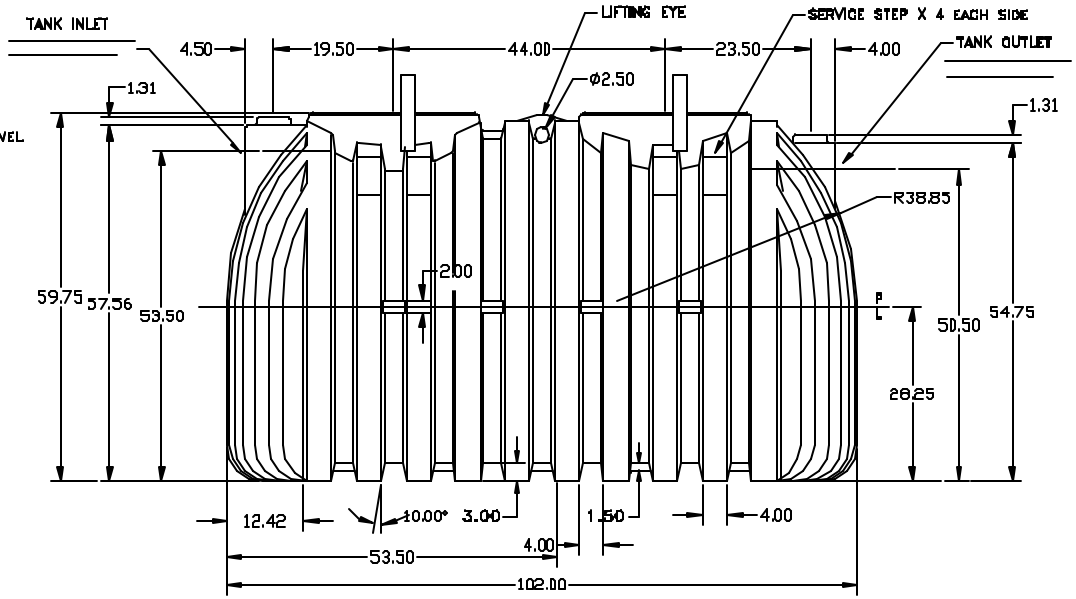

REV	DESCRIPTION	DATE	APPRD
B	ADDED PUBLICATION REF	10/12/05	NVE
A	TANK REVISED TO NEW LID	5/10/04	

DRAWN / DATE
REH / 11/1/97

APPRD. / DATE
REH / 11/1/97

MATERIAL

MOBIL 111 HDPE OR EQUIVELENT REFERENCE MATERIAL DATA SHEET FOR SPECIFIC PROPERTIES.

ALL DIMENSIONS ARE IN DECIMAL INCHES
TOLERANCES UNLESS OTHERWISE SPECIFIED
± 1% @ 68° F

THIRD ANGLE PROJECTION
ANSI 14.5M

NOTES:

1. NOM. WALL @ .280
2. YELLOW COLOR
3. SHOT WEIGHT 362 LBS.

CSI
ChemIndustrial Systems, Inc.
PO Box 500, Cedarburg, WI 53012
262-375-8570 • (Fax) 262-375-8559 • info@chemindustrial.com

SCALE N.S.

PART NO. TBS1000GAL-101L-1