TBC1700GAL-137L

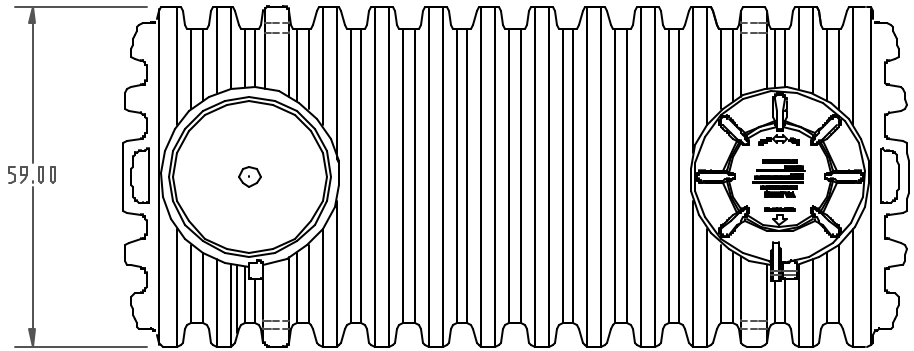

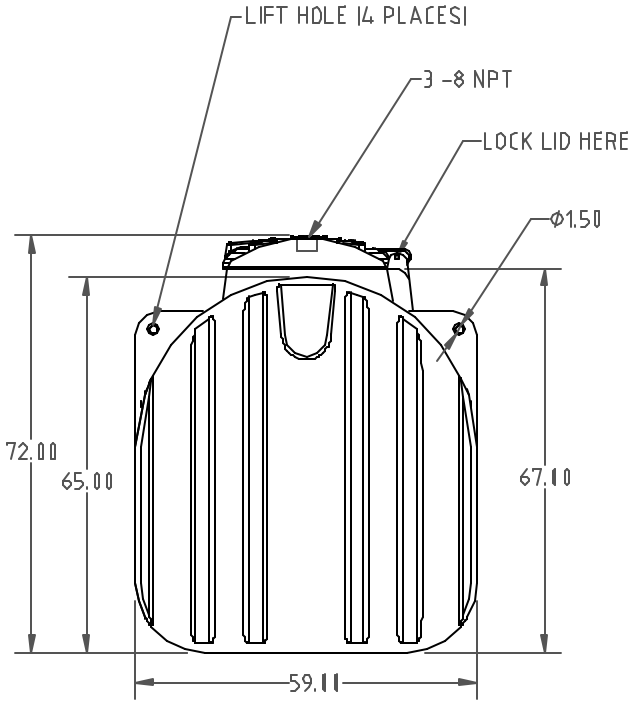

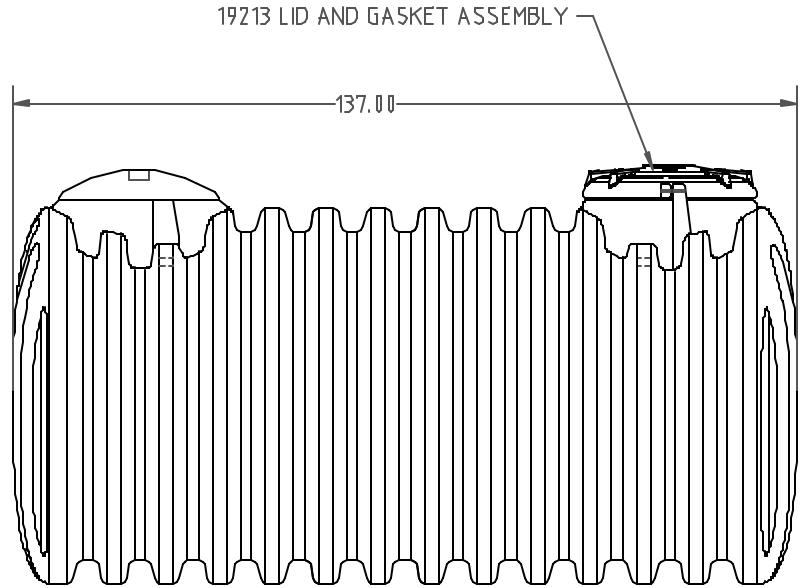

REV	DESCRIPTION	DATE	APPRD
C	CHANGE TO ONE LID	3/17/16	DHJ
B	CHANGE WEIGHT WAS 528	3/17/16	DHJ
A	ADDED PUBLICATION REF	9/30/15	NVE

DRAWN / DATE
REH / 3/15/14

APPRD. / DATE
REH / 3/15/14

MATERIAL

EXXON HD8661 HDPE OR EQUIVELENT
REFERENCE MATERIAL DATA SHEET
FOR SPECIFIC PROPERTIES.

ALL DIMENSIONS ARE IN DECIMAL INCHES
TOLERANCES UNLESS OTHERWISE SPECIFIED
± 1% @ 68° F

THIRD ANGLE PROJECTION
ANSI 14.5M

NOTES:

1. MIN. WALL @ .251
2. NATURAL COLOR
3. SHOT WEIGHT 553 LBS.

CSI
ChemIndustrial Systems, Inc.
PO Box 500, Cedarburg, WI 53012
262-375-8570 • (Fax) 262-375-8559 • info@chemindustrial.com

SCALE N.S.

PART NO. TBC1700GAL-137L