FHT325GAL-PE-38DIA

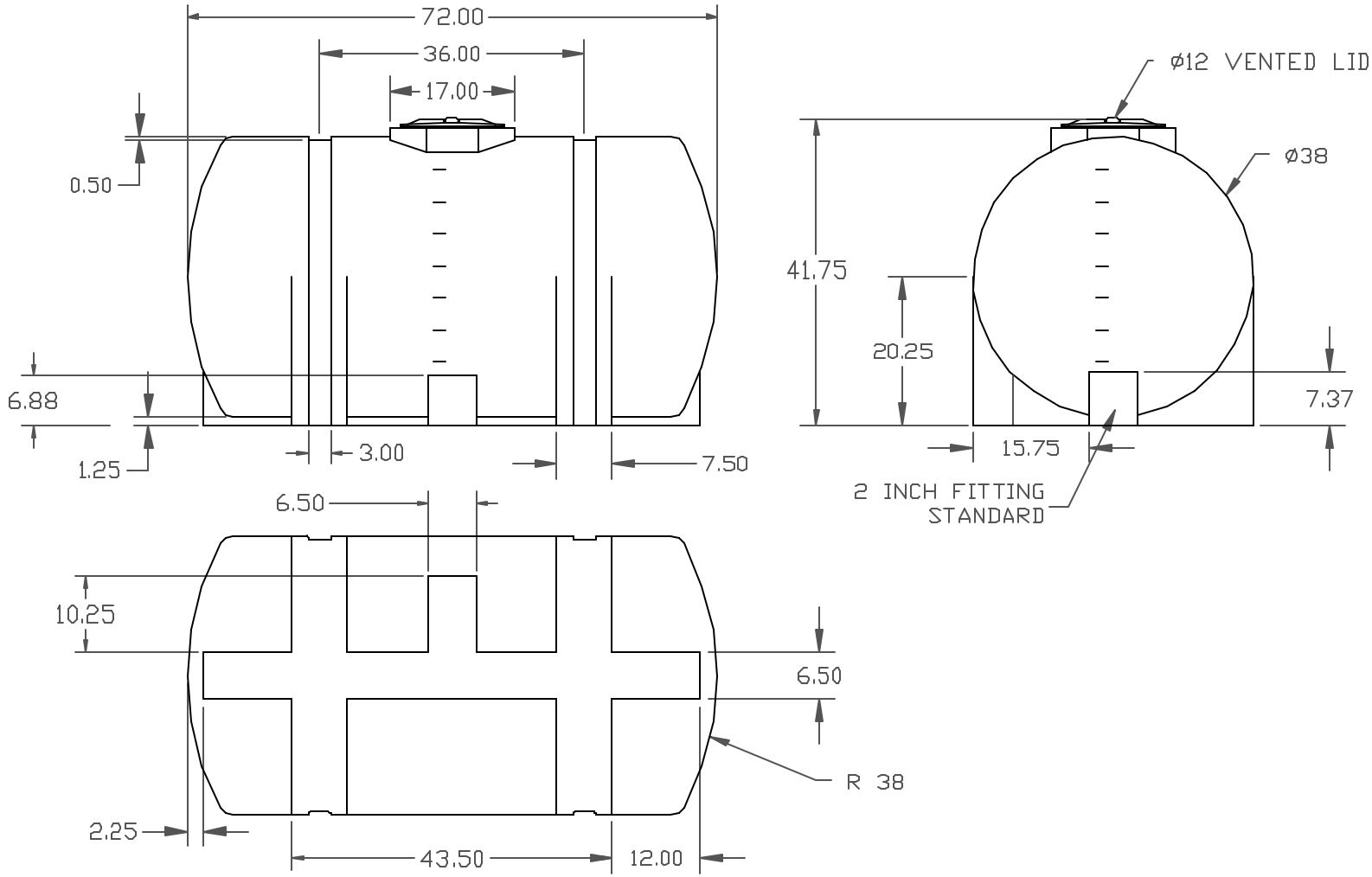


| REV | DESCRIPTION | DATE | APPRO |
|---|---|---|---|
| A | CHANGE TO 12" LID | 1/19/05 | |

DRAWN / DATE
DHJ 11/15/14

APPRD. / DATE
DHJ 9/21/05

MATERIAL

3 MELT HDPE
REFERENCE MATERIAL DATA SHEET
FOR SPECIFIC PROPERTIES.

ALL DIMENSIONS ARE IN DECIMAL INCHES
TOLERANCES UNLESS OTHERWISE SPECIFIED
± 1% @ 68° F

THIRD ANGLE PROJECTION
ANSI 14.5M

NOTES:

1. WHITE, BLACK, OR YELLOW COLOR
2. SHOT WEIGHT 106 LBS.
3. NOM. WALL @ .281


CSI
ChemIndustrial Systems, Inc.
PO Box 500, Cedarburg, WI 53012
262-375-8570 • (Fax) 262-375-8559 • info@chemindustrial.com


SCALE N.S.

PART NO. FHT325GAL-PE-38DIA