EHT1600GAL-PE-78DIA-ASY

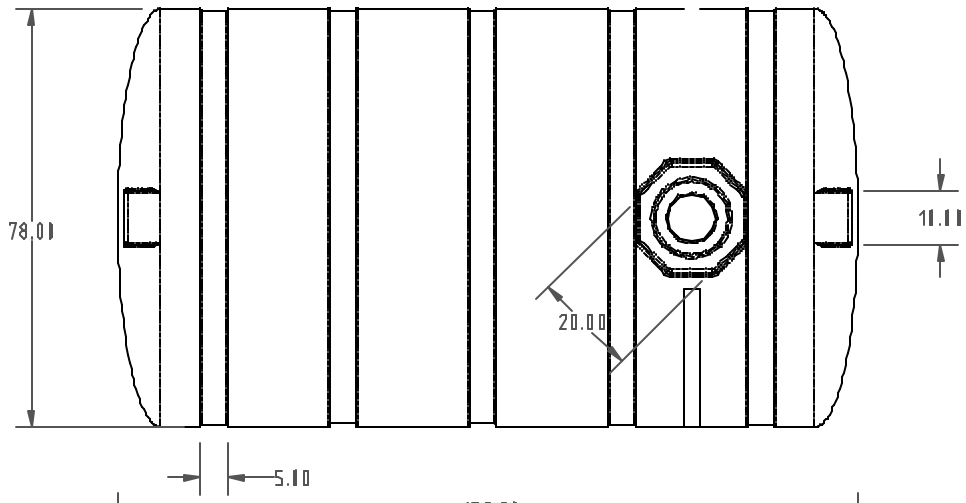


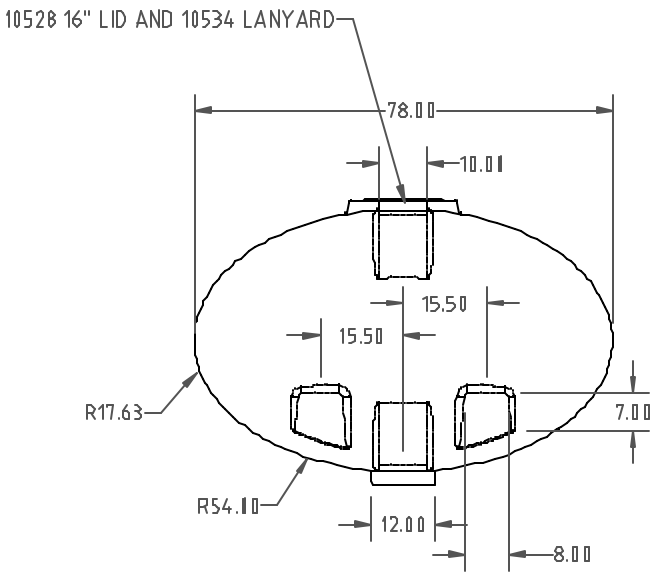


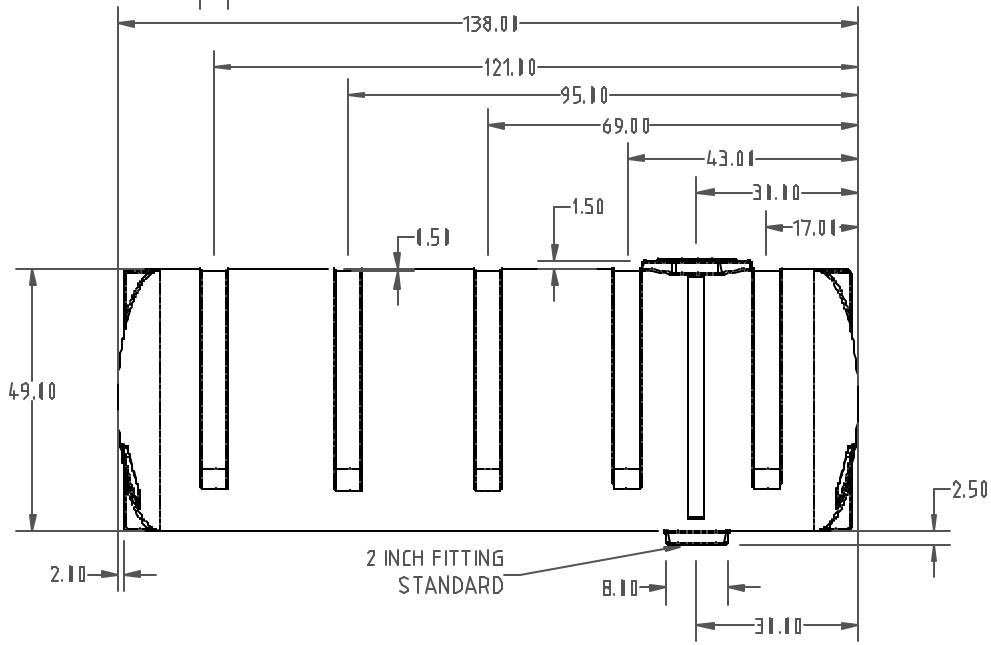


| REV | DESCRIPTION | DATE | APPRD |
|---|---|---|---|
| | | | |
| | | | |
| | | | |

DRAWN / DATE
REH/8/16/04

APPRD. / DATE
REH/8/16/04

| MATERIAL / SHOT WEIGHT | | | |
|---|---|---|---|
| M111 | M134 | U625 | P938 |
| | 400 | | |

ALL DIMENSIONS ARE IN DECIMAL INCHES
TOLERANCES UNLESS OTHERWISE SPECIFIED
± .5% @ 68° F

THIRD ANGLE PROJECTION
ANSI 14.3M

NOTES:
1. .335 NOMINAL WALL


CSI
ChemIndustrial Systems, Inc.
PO Box 500, Cedarburg, WI 53012
262-375-8570 • (Fax) 262-375-8559 • info@chemindustrial.com


SCALE N.S.

PART NO. EHT1600GAL-PE-78DIA-ASY